T: +44 (0)1444 410040 E: sales@psmmarine.com
www.psmmarine.com

APT 500 Series

Analogue Pressure Transmitter for Marine and Industrial applications

Key features

- Industry standard DIN Plug or Stainless Steel Terminal Head connection
- Choice of construction materials depending on application
- Robust construction with high overload tolerance
- Nominal measurement ranges from -1.0 to 60 bar
- Vented Gauge and Absolute versions
- Accuracy of +/-0.2% of full range
- Temperature compensated output over 0 to 70°C
- IECEx and ATEX certified for use in hazardous Areas (Zone 0)
- Marine Type Approved for Shipboard application

PSM is a Scanjet Group Company

www.scanjet.se **www.psmmarine.com**

PSM Instrumentation Ltd, Unit 3 Burrell Road, Haywards Heath, West Sussex, RH16 1TW. UK

DAT55O Sept 2024

T: +44 (0)1444 410040 E: sales@psmmarine.com
www.psmmarine.com

Specifications

Materials	Sensor body	316L standard. Optional Hastelloy C276 process port Optional all Titanium construction
	Diaphragm	316L standard, optional Tantalum with Hastelloy port Titanium with Titanium body
	Terminal Head	DIN Plug - ABS : Terminal Head - 316L St. Steel
Standard Measurement Ranges (Bar)	-1.0, -0.5, 0.5, 1.0, 2.5, 4.0, 10, 25, 40, 60.	
Measurement type	Vented Gauge or Absolute – refer for availability of specific range	
Overload	2 x Nominal range with no effect	
Span accuracy	0.2% within compensated range	
Zero accuracy	0.2% within compensated range	
Total Error Band	+/- 0.2% of Nominal range at reference conditions of 25°C	
Thermal compensation	Max +/- 0.0075% of Nominal range for Zero & Span /°C from reference	
Long term stability	Error not exceeding 0.1% Per Annum	
Max / Min process temperature	-30 to +85°C	
IP Rating	IP65 DIN Plug - IP67 Terminal Head	
IECEx certification	IECEx ITS180012X.0 Ex ia IIC T4 Ga -30°C ≤ Ta ≤ +85°C	
ATEX certification	ITS18ATEX203153X Issue 0 Ex ia IIC T4 Ga -30°C ≤ Ta ≤ +85°C	
Signal Output / Power supply	4-20mA / 18-30V DC	
Reverse Polarity Protection	Yes	
Maximum load	Supply dependant. Vs-18/0.02 = Load in Ohms	
Weight	0.35 - 0.5Kg (typical)	

With a choice of measurement ranges and materials, robust construction and excellent accuracy the APT500 series is equally suitable for both marine and land based industrial applications.

Signal output is industry standard 4-20mA 2 wire, which can be supplied to a standard range or calibrated during production to specific needs.

The all welded body uses 316L Stainless Steel as standard. The option of a process port in Hastelloy C276 with a Tantalum diaphragm ensures compatibility with many corrosive fluids. For seawater duties an all Titanium construction can be specified.

Connection is by industry standard DIN plug or optional Stainless Steel Terminal Head.

Integral thermal compensation for actual temperature ensures accuracy is maintained over a wide operating temperature and the solid-state measurement element employs the latest technology to ensure excellent long term stability.

T: +44 (0)1444 410040 E: sales@psmmarine.com
www.psmmarine.com

scanjet PSM an Alfa Laval brand

APT500 Pressure Transmitter

550D	APT 550 - DIN Plug Type 43650 connection
550H	APT 550 - Terminal Head

Certification

S	Hazardous Area Approval NOT APPLICABLE
I	Certified Intrinsically Safe to ATEX - Hazardous Area Approved
X	Certified Intrinsically Safe to IECEx - Hazardous Area Approved
IX	Dual Certification ATEX / IECEx - Hazardous Area Approved

Measurement Type

A	Absolute
G	Gauge

Nominal Range

	Absolute				Gauge		
	TI	SS	HT		TI	SS	HT
A	N/A	N/A	N/A	A	N/A	0.2 Bar	N/A
B	N/A	N/A	N/A	B	0.5 Bar	0.5 Bar	0.5 Bar
C	N/A	N/A	N/A	C	1.0 Bar	1.0 Bar	1.0 Bar
D	2.5 Bar	2.5 Bar	2.5 Bar	D	2.5 Bar	2.5 Bar	2.5 Bar
E	4.0 Bar	4.0 Bar	4.0 Bar	E	4.0 Bar	4.0 Bar	4.0 Bar
F	10 Bar	10 Bar	10 Bar	F	10 Bar	10 Bar	10 Bar
H	25 Bar	25 Bar	25 Bar	H	25 Bar	25 Bar	25 Bar
I	40 Bar	40 Bar	40 Bar	I	40 Bar	40 Bar	40 Bar
J	60 Bar	60 Bar	60 Bar	J	60 Bar	60 Bar	60 Bar

Process Connections & Fitting Options

1	1/2" BSP Male (Standard connection). Material is as specified for the main body
3	G1" Male Adapter in 316 Stainless Steel
6	G1/2" to DIN EN837 Stainless Steel (Special order, refer for delivery time)

Cable Length mtrs (only applicable to submersible APT 500 versions)

0	Not Applicable

Material

SS	Stainless Steel (Body & Diaphragm)
HT	Hastelloy / Tantalum wetted parts (St. Stl. Body)
Ti	Titanium Construction

Transmitter Orientation

H	Horizontal
V	Vertical - Diaphragm facing down
U	Vertical - Diaphragm facing up

Example:	550D	S	A	E	1	0	SS	H

Written as 550D/S/A/E/1/0/SS/H

Note: Transmitter will be calibrated for 4-20 mA over Nominal range as standard. Where a specific calibration range is required this must be advised separately.

Actual calibration can be a maximum of 2:1 turndown from Nominal range.

Dimensions

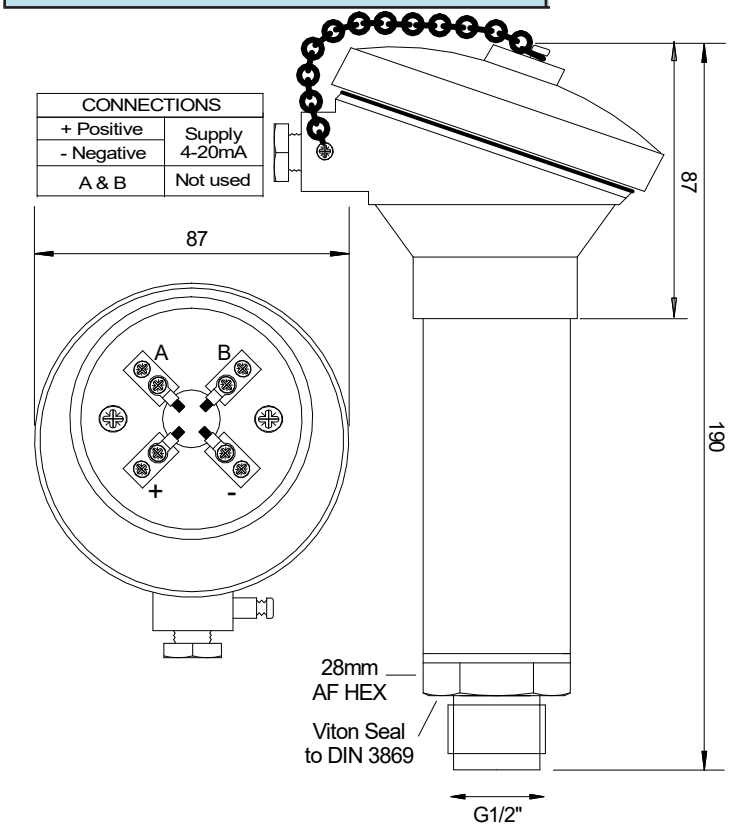

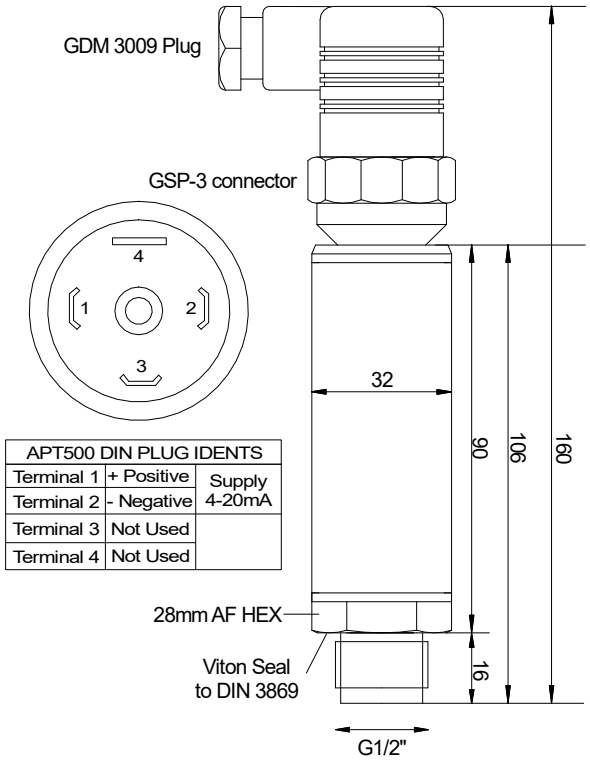

APT500 DIN PLUG IDENTS		
Terminal 1	+ Positive	Supply 4-20mA
Terminal 2	- Negative	
Terminal 3	Not Used	
Terminal 4	Not Used	